CUI Devices is now Same Sky! Learn More

MODEL: UJC-H-G-SMT-2-P6-TR | DESCRIPTION: USB RECEPTACLE

FEATURES

- USB Type C receptacle
- power only
- reflow solder compatible
- tape & reel packaging

SPECIFICATIONS

parameter	conditions/description	min	typ	max	units
USB standard	power only				
rated input voltage				30	Vdc
rated input current	as per EIA-364-70, Method B power pins collectively (A9, A12, B9, B12) VCONN pins individually (A5, B5) all other signal pins individually			 5.0 1.5 0.25	 A A A
contact resistance[1]	between terminals and mating plug			40	mΩ
insulation resistance	at 100 Vdc between adjacent contacts	100			MΩ
voltage withstand	between adjacent contacts for 1 minute	100			Vac
insertion force	at a rate of 30 cycles/min	5		20	N
withdrawal force	at a rate of 30 cycles/min	8		20	N
life	at a rate of 500 cycles per hour		10,000		cycles
operating temperature		-25		85	°C
flammability rating	UL94V-0				
RoHS	yes				

Note: 1. When measured at 20 mV / 100 mA.

SOLDERABILITY

parameter	conditions/description	min	typ	max	units
reel storage	at 20~30°C, 40~75% humidity				
reflow soldering	see reflow profile			260	°C

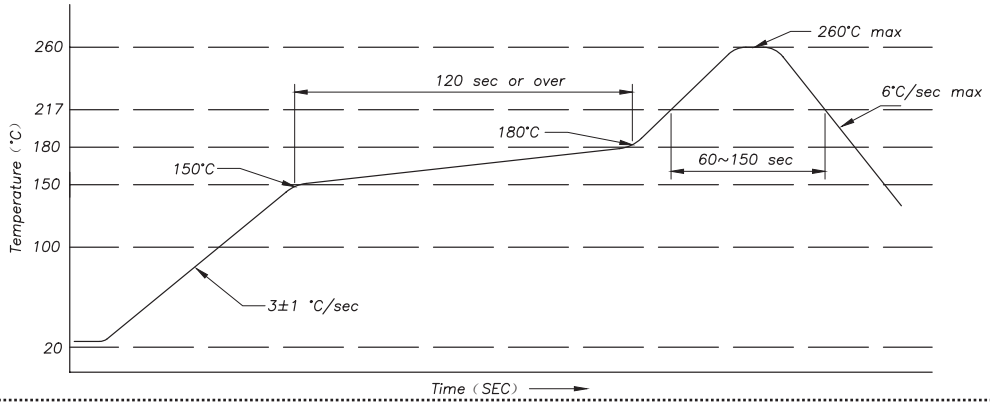

MECHANICAL DRAWING

units: mm
tolerance:
X.X ±0.30 mm
X.XX ±0.20 mm
X.XXX ±0.10 mm
unless otherwise specified

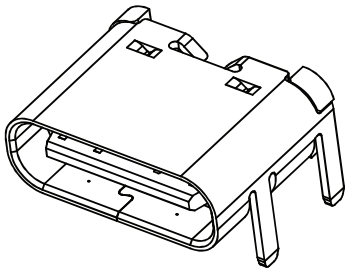

DESCRIPTION	MATERIAL	PLATING/COLOR
housing	PA9T (UL94V-0)	black
contact	C1815	contact area: 1 μ" gold over 50 μ" nickel solder area: 1 μ" gold over 50 μ" nickel
mid plate	SUS301	clear
front shell	SUS304	nickel

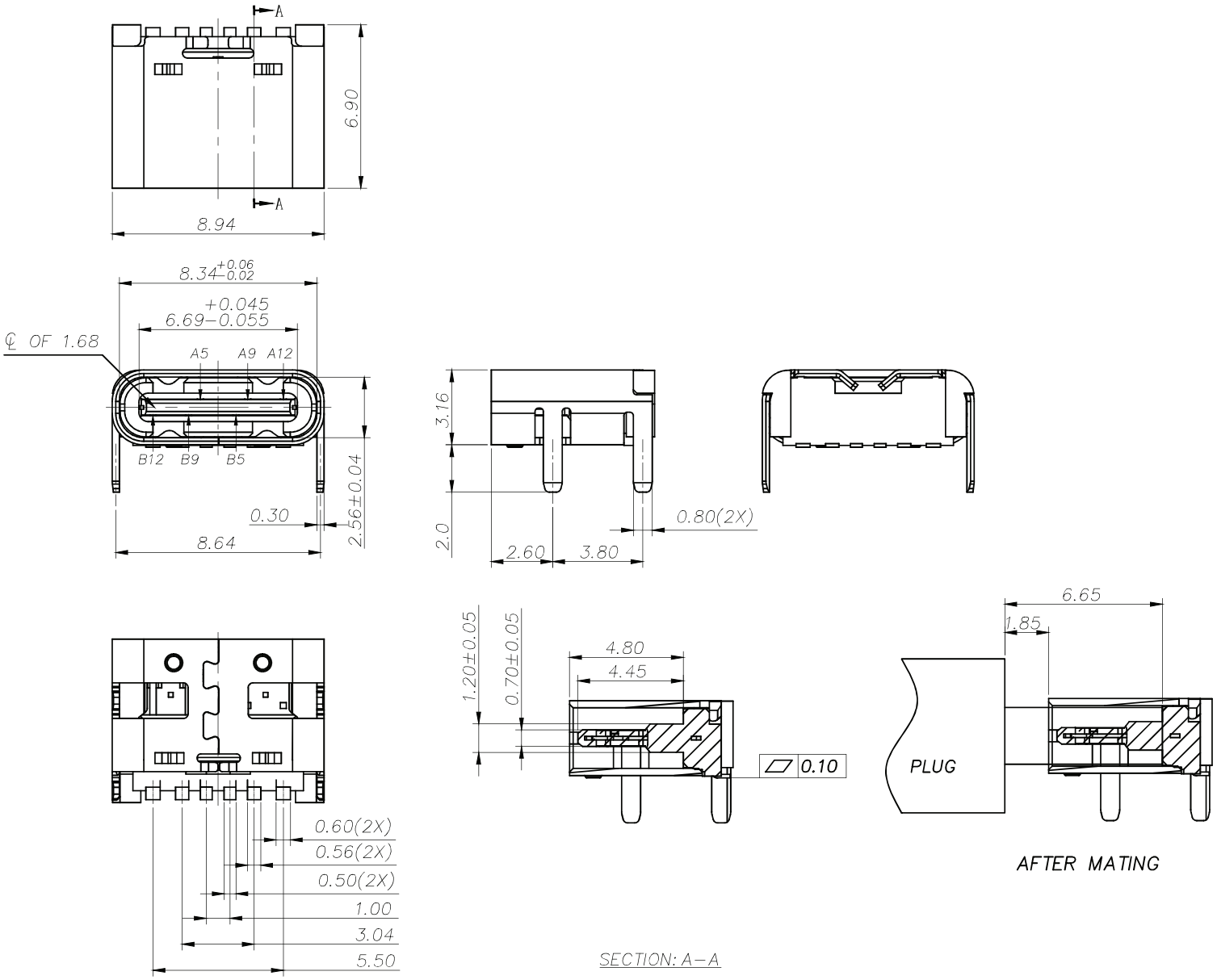

MECHANICAL DRAWING (CONTINUED)

units: mm
PCB tolerance: ±0.05 mm

PIN CONNECTIONS			
PIN	SIGNAL NAME	PIN	SIGNAL NAME
A5	CC1	B12	GND
A9	VBUS	B9	VBUS
A12	GND	B5	CC2

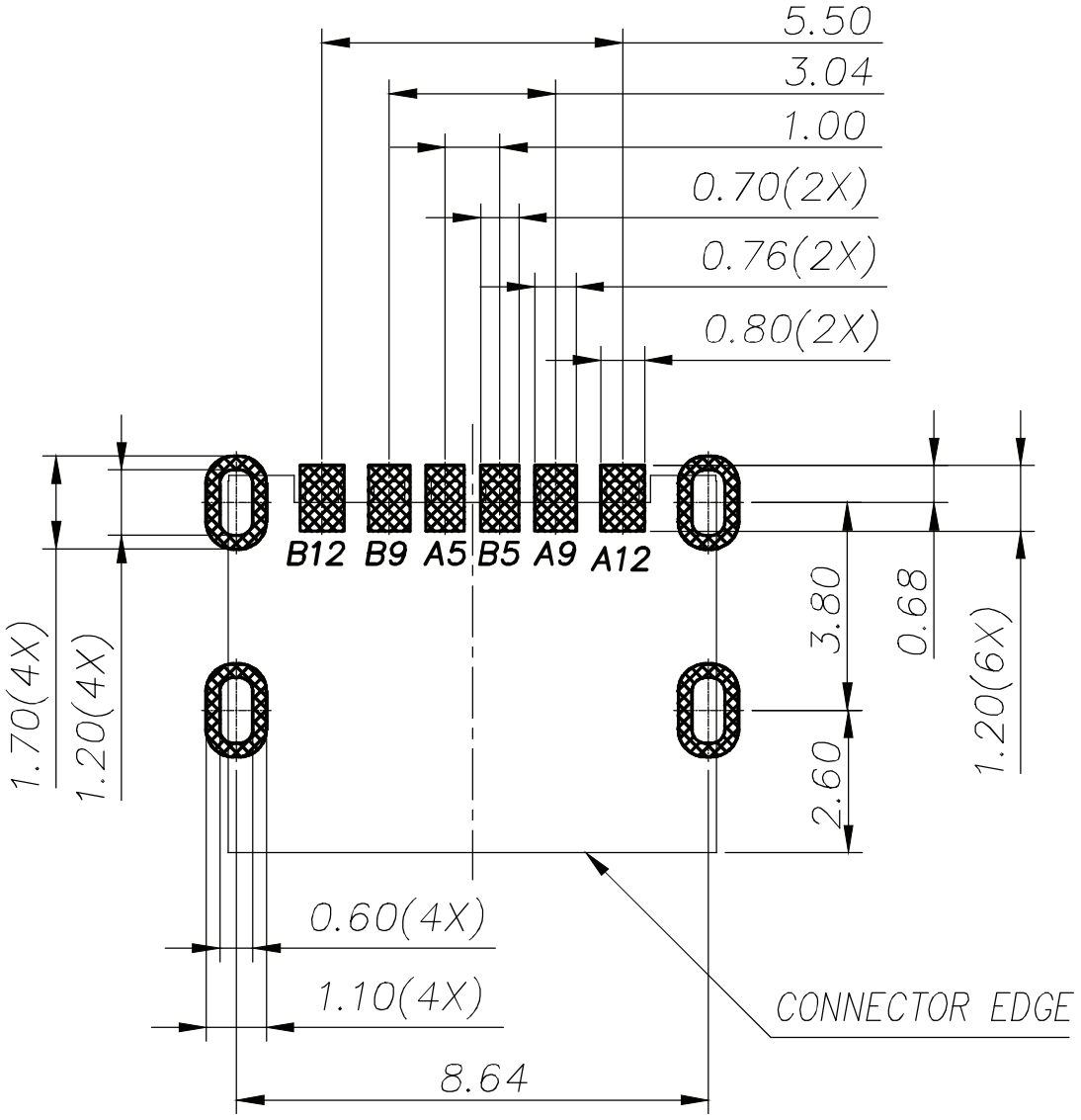

Recommended PCB Layout
Top View

PACKAGING

units: mm

Reel Size: Ø380
Tube QTY: 1,000 pcs per reel
Carton Size: 330 x 330 x 320 mm
Carton QTY: 10,000 pcs

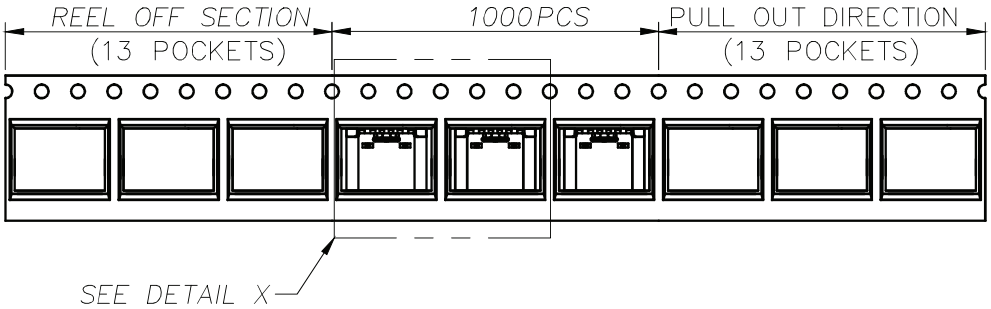

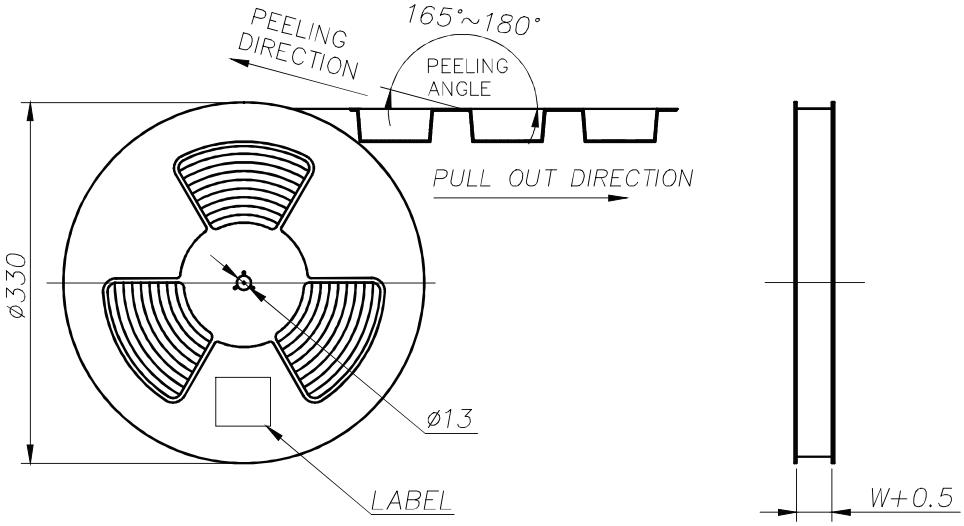

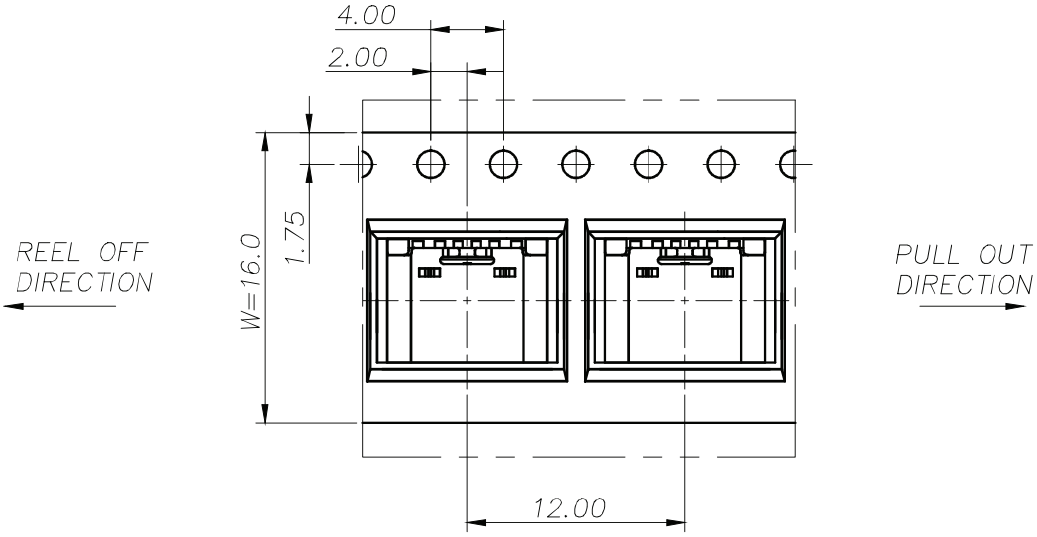

REVISION HISTORY

rev.	description	date
1.0	initial release	07/29/2024
1.01	CUI Devices rebranded to Same Sky	09/12/2024

The revision history provided is for informational purposes only and is believed to be accurate.

Same Sky offers a one (1) year limited warranty. Complete warranty information is listed on our website.

Same Sky reserves the right to make changes to the product at any time without notice. Information provided by Same Sky is believed to be accurate and reliable. However, no responsibility is assumed by Same Sky for its use, nor for any infringements of patents or other rights of third parties which may result from its use.

Same Sky products are not authorized or warranted for use as critical components in equipment that requires an extremely high level of reliability. A critical component is any component of a life support device or system whose failure to perform can be reasonably expected to cause the failure of the life support device or system, or to affect its safety or effectiveness.